DRAWING NUMBER
DD-652-854

IF IN DOUBT, ASK

DO NOT SCALE

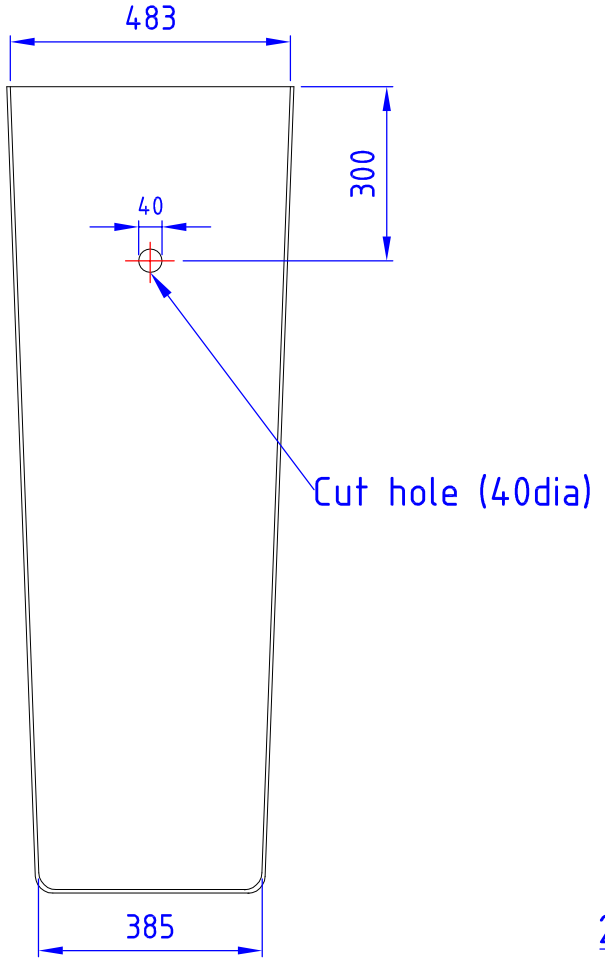


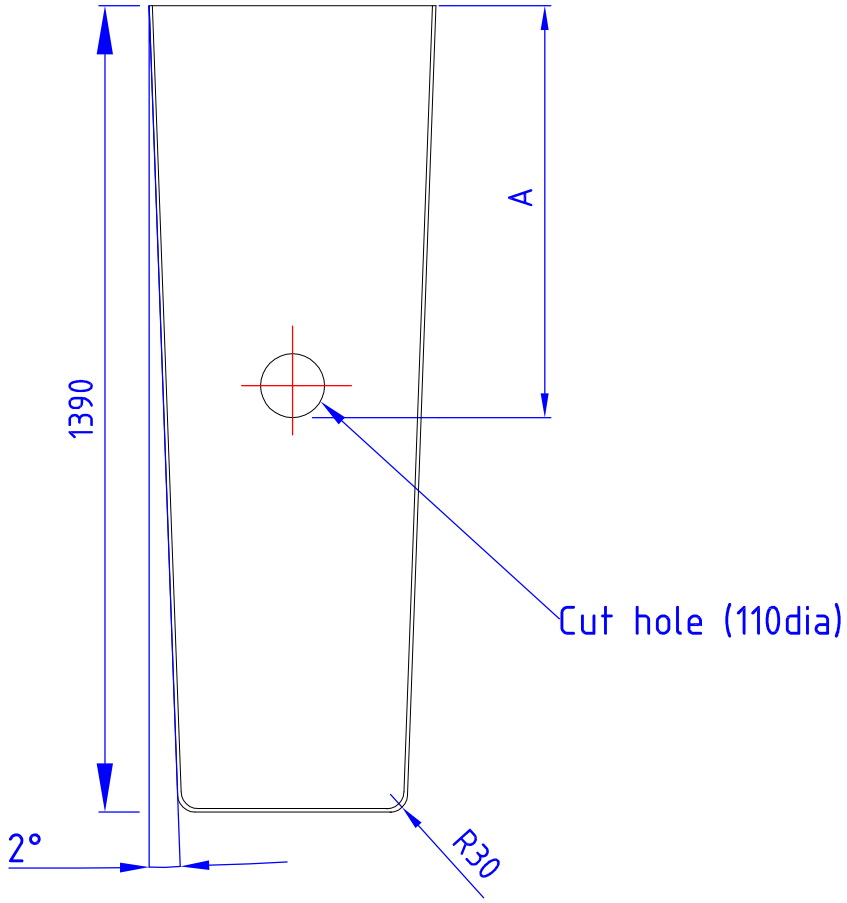


| | A |
|---|---|
| DMS2 | 710 |
| DMS3 | 880 |
| DMS4/5 | 900 |

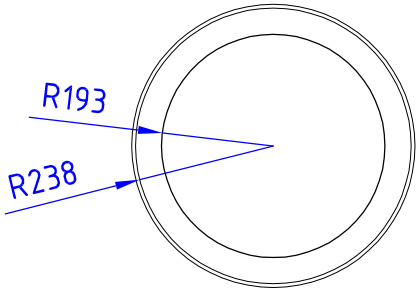


| DESIGN | ISSUE | DATE | CHANGE | INITIAL |
|---|---|---|---|---|
| CT | A | 23/01/2014 | NEW DRAWING | |
| CHECKED | B | 11/12/2014 | AMENDED DIMENSIONS | KM |
| DRAWN | | | | |
| CT | | | | |


WPL LIMITED
1 & 2 ASTON ROAD
WATERLOOVILLE
HAMPSHIRE
P07 7UX
TEL: (02392) 242600
FAX: (02392) 242624
e-mail: engineering@wpl.co.uk


© This drawing is the copyright of WPL ltd

SCALE N.T.S.
DIM'S IN mm
PAPER SIZE A4
TOLERANCES +/- 10mm
MATERIAL GRP
FINISH INTERNAL: BLUE 16 C 33 TO BS4800
DK GREEN 14 C 39 TO BS4800

TITLE EPC PUMP CHAMBER

DRAWING NUMBER
DD-652-854