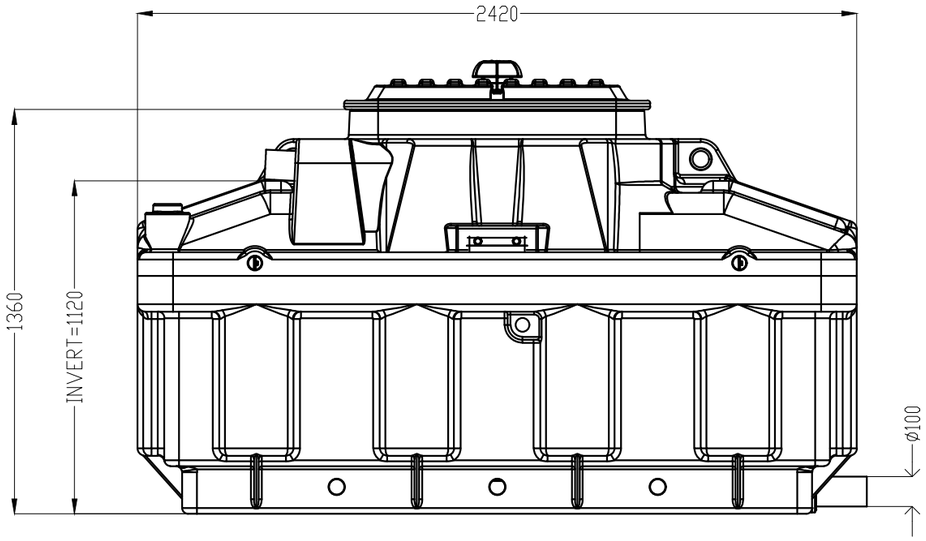

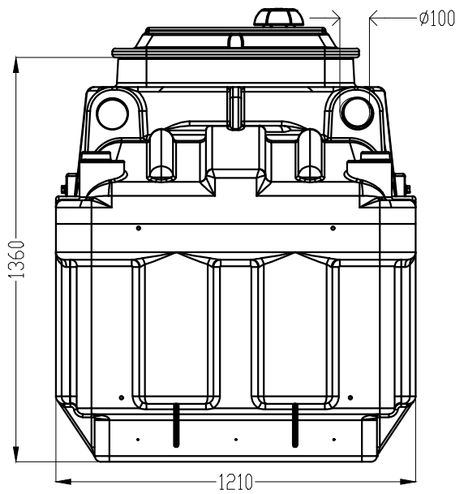

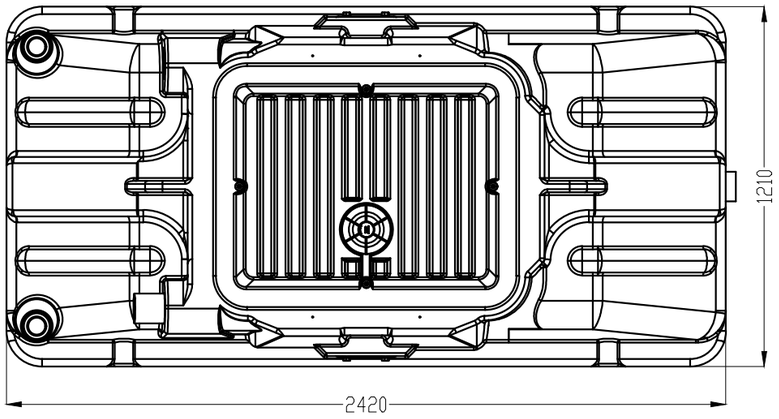

NOTES:
Sizing and installation to conform to local regulations and to manufacturers installation guidelines.

Tol: 3%

REV.	DATE	BY	CHKD.	APPD.	DESCRIPTION
1	11.02.16	LT	RP	–	ISSUED FOR INFO

W S E N
FOR INTERNAL USE ONLY

1ST ANGLE PROJECTION

GENERAL TOLERANCES (unless noted otherwise)

GRP	LINEAR	± 5mm	ANGLE	±0.5°
FABRICATED		± 2mm		±0.2°
MACHINED		± 0.5mm		±0.1°

IMPORTANT INVERT LEVEL NOTE (RIBBED TANKS ONLY!):
The inlet and outlet Invert Level(IL) shown on this drawing is to internals of the shell unless otherwise stated.
For Invert level to the outside of the shell ribs, see the conversion below:
Ø1.0m, 1.2m, 1.5m, 1.8m, 2.5m IL+50mm ('X')
Ø3.0m,4.0m IL+75mm ('X')

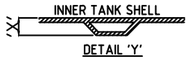

TANKS SUPPLIED WITH LOOSE SHAFTS DO NOT COME SUPPLIED WITH A FIXING KIT.
THIS IS THE RESPONSIBILITY OF THE SITE CONTRACTOR.

A3

DO NOT SCALE
IF IN DOUBT ASK
ALL DIMENSIONS IN MM

THIS DRAWING IS THE PROPERTY OF
PREMIER TECH AQUA Ltd. AND IS NOT TO BE
COPIED IN PART OR WHOLE WITHOUT WRITTEN PERMISSION

PREMIER TECH AQUA

TITLE: Ecoflo HDPE Filter 4PE

DRAWN BY	CHKD.	APPD.	SCALE	DRAWING No.	REVISION
LT	RP	–	NTS	Ecoflo HDPE Filter 4PE	1
DATE 11.02.16	DATE 11.02.16	DATE –			